GV-BX1500 Series 1.3MP H.264 Super Low Lux WDR D/N Box IP Camera

GV-BX1500-0F / 1F / 2F

GV-BX1500-3V

- 1.3 megapixel progressive scan super low lux CMOS
- Dual streams from H.264 and MJPEG
- Up to 30 fps at 1280 x 1024
- Built-in / external microphone
- 2-way audio
- One sensor input and alarm output
- TV-out support
- Built-in Micro SD (SDHC / SDXC) card slot for local storage
- Mini USB slot for WiFi Adapter or USB hard drive
- Wide Dynamic Range (WDR)
- Defog
- Motion detection
- Tampering alarm
- Privacy mask
- IP address filtering
- DC 12V / PoE
- Removable IR-cut filter for Day/Night function
- Varifocal megapixel lens
- Supports iPhone, iPad, Android & 3GPP
- 31 languages on Web interface
- ONVIF (Profile S) conformant

* No Memory card slot & local storage function for Argentina.

Introduction

The GV-BX1500 is a series of indoor IP cameras containing a varifocal model and several fixed focal models. The camera is equipped with a Super Low Lux CMOS image sensor which allows the live view to be seen at near darkness. The camera features a mini USB port which supports wireless connection through a GV-WiFi Adapter (optional) or external storage using a USB hard drive.

Models

Models	Iris	Focal Length (mm)	Maximum Aperture	Image Format
BX1500-0F	Fixed	4 mm	F/1.5	1/3”
BX1500-1F		8 mm	F/1.6	1/2.5”
BX1500-2F		12 mm		
BX1500-3V	DC drive	2.8 ~ 12 mm	F/1.5	1/3”

Active Tampering Alarm

Tampered

Focus Change

Camera Shift

Dimensions

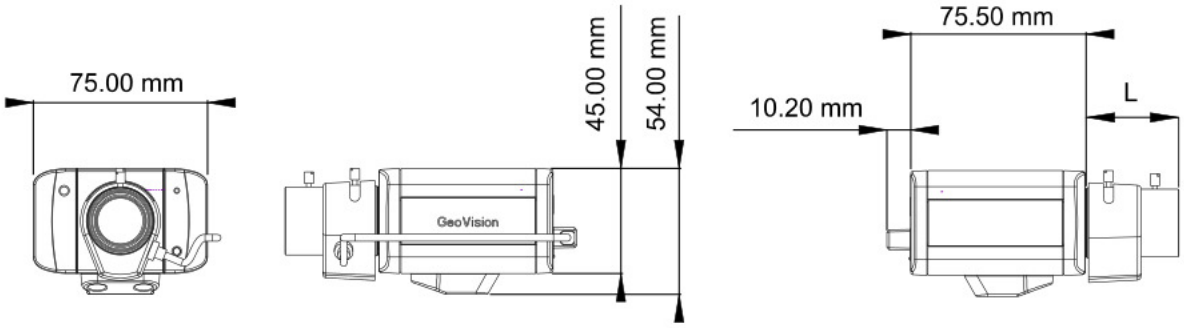

Specifications

Camera		GV-BX1500-0F	GV-BX1500-1F	GV-BX1500-2F	GV-BX1500-3V
Image Sensor		1/3" progressive scan super low lux CMOS			
Picture Elements		1280 (H) x 1024 (V)			
Minimum Illumination	Color	0.01 Lux			
	B/W				
	IR ON	0 Lux			
Shutter Speed		Automatic, Manual (1/5 ~ 1/8000 sec)			
White Balance		Automatic, Manual (2800 ~ 8500K)			
Gain Control		Automatic			
S/N Ratio		55 dB			
WDR		Yes			
Lens					
Megapixel		Yes			
Day/Night		Yes (with removable IR-cut filter)			
Lens Type		Fixed			Varifocal
Focal Length		4 mm	8 mm	12 mm	2.8 ~ 12 mm
Maximum Aperture		F/1.5	F/1.6		F/1.4
Mount		CS Mount			
Image Format		1/3"	1/2.5"		1/3"
Operation	Focus	Manual			Manual (w/lock)
	Zoom	Fixed			Manual (w/lock)
	Iris	Fixed			DC drive
Torque (Focus/Zoom screws)		0.049 N.m			
Operation					
Video Compression		H.264, MPEG4			
Video Streaming		Dual streams from H.264 or MJPEG			
Frame Rate		30 fps at 1280 x 1024 * The frame rate and performance may vary depending on the number of connections and data bitrates (different scenes).			
Image Setting		Brightness, Contrast, Saturation, Sharpness, Gamma, White Balance, Flicker-less, Image Orientation, Shutter Speed, D/N Sensitivity, Backlight Compensation, WDR, Defog, Super Low Lux			
Audio Compression		G.711			
Two-way Audio		Yes			
Sensor Input		1 input (Dry Contact)			
Alarm Output		1 Digital Output (200mA 5V DC)			
Video Resolution					
Main Stream	4:3	1280 x 960, 640 x 480, 320 x 240			
	16:9	1280 x 720, 640 x 360, 448 x 252			
	5:4	1280 x 1024, 640 x 512, 320 x 256			
Sub Stream	4:3	640 x 480, 320 x 240			
	16:9	640 x 360, 448 x 252			
	5:4	640 x 512, 320 x 256			
Network					
Interface		10/100 Ethernet			
Protocol		DHCP, DynDNS, FTP, HTTP, HTTPS, NTP, ONVIF (Profile S), PSIA, QoS (DSCP), RTSP, SNMP, SMTP, TCP,			

Antenna Type		External
Security		WEP, WPA-PSK(TKIP), WPA-PSK(AES), WPA2-PSK(TKIP), WPA2-PSK(AES)
Mechanical		
Temperature Detector		Yes
Connectors	Power	2-pin terminal block, PoE
	Ethernet	RJ-45
	Audio	1 In (Using the built-in microphone or externally connecting a microphone) 1 Out (Stereo phone jack, 3.5 mm / 0.14'')
	Digital I/O	3-pin terminal block, pitch 2.5 mm (0.1'')
	Auto Iris	Yes
	Local Storage	Micro SD memory card slot (SDHC / SDXC for Class 6 card or above)
	TV-Out	BNC connector (640 x 480 resolution)
	Mini USB	GV-WiFi Adapter or USB hard drive
LED Indicator		2 LEDs: Power, Status
General		
Operating Temperature		0 °C ~ 50 °C (32 °F ~ 122 °F)
Humidity		10% to 90% (no condensation)
Power Source		12V DC / PoE
Max. Power Consumption		9.5W
Dimensions (without lens)		75.5 x75 x 54 mm (2.97'' x 2.95'' x 2.13'')
Weight		300 g (0.66 lb)
Regulatory		CE, RCM, FCC, RoHS compliant
Power over Ethernet		
PoE Standard		IEEE 802.3af Class 3 Power over Ethernet / PD
PoE Power Supply Type		End-Span
PoE Power Output		Per Port 48V DC, 350mA. Max. 15.4 watts
Web Interface		
Installation Management		Web-based configuration
Maintenance		Firmware upgrade through Web Browser or Utility
Access from Web Browser		Camera Live View, Video Recording, Change Video Quality, Bandwidth Control, Image Snapshot, Digital I/O control, Audio, Picture in Picture, Picture and Picture, Privacy Mask, Visual Automation, Tampering Alarm, Text Overlay, Digital PTZ
Language		Arabic / Bulgarian / Czech / Danish / Dutch / English / Finnish / French / German / Greek / Hebrew / Hungarian / Indonesian / Italian /Japanese / Lithuanian / Norwegian / Persian / Polish / Portuguese / Romanian / Russian / Serbian / Simplified Chinese / Slovakian / Slovenian / Spanish / Swedish / Thai / Traditional Chinese / Turkish
Applications		
Network Storage		GV-NVR, GV-System, GV-Backup Center, GV-Recording Server
Smart Device Access		GV-Eye for Android smartphone, tablet, iPhone, and iPod Touch GV-Eye HD for iPad
Live Viewing		IE, mobile phone
CMS Server support		GV-Control Center, GV-Center V2, GV-VSM

Note:

1. The signal range and data throughput may vary depending on the network conditions and environmental factors.
2. Mind the following limitations and requirements for the mini USB port:
   - The USB hard drive must be of 2.5'' or 3.5'', version 2.0 or above
   - The USB hard drive's storage capacity must not exceed 2TB
   - USB flash drives and USB hubs are not supported
   - External power supply is required for the USB hard drive
   - To connect a GV-WiFi Adapter, make sure it is connected before the camera is powered on.
3. Specifications are subject to change without notice.

Accessories

Name		Details
GV-IR LED T2		Weight: 140 g / 0.31 lbs Dimensions (H x W x D): 49 x 47 x 67 mm / 1.93 x 1.85 x 2.64 in
GV-PA191 PoE Adapter		Weight: 130 g / 0.29 lb Dimensions (H x W x D): 43 x 69 x 40 mm / 1.69 x 2.72 x 1.57 in
GV-Relay V2		The GV-Relay V2 is designed to expand the voltage load of GV IP devices. It provides 4 relay outputs, and each can be set as normally open (NO) or normally closed (NC) independently as per your requirement.
Power Adapter		Power adapters are available in 4 regions: U.S.A., Australia, U.K and Europe.
GV-WiFi Adaptor		Weight: 20 g / 0.04 lb Dimensions: 15 x 15 x 155 mm / 0.59'' x 0.59'' x 6.10'' Supplied with mini USB to standard USB adapter.
Fixed Lens : 4 mm		Description: Megapixel day/ night lens Focal Length: 4 mm Maximum Aperture: F/1.5 Mount: CS Mount Image Format: 1/3" Operation: Focus: Manual; Zoom: Fixed; Iris: Fixed Dimension: ø30 x 27 mm / ø1.18 x 1.06 in Weight: 30 g / 0.07 lb

Name		Details	
Fixed Lens : 8 mm		Description	Megapixel day/ night lens
		Focal Length	8 mm
		Maximum Aperture	F/1.6
		Mount	CS Mount
		Image Format	1/2.5"
		Operation	Focus: Manual Zoom: Fixed Iris: Fixed
		Dimension	ø 30 x 19.6 mm / ø 1.18 x 0.77 in
		Weight	27.7 g / 0.06 lb
Fixed Lens : 12 mm		Description	Megapixel day/ night lens
		Focal Length	12 mm
		Maximum Aperture	F/1.6
		Mount	CS Mount
		Image Format	1/2.5"
		Operation	Focus: Manual Zoom: Fixed Iris: Fixed
		Dimension	ø 30 x 20.6 mm / ø 1.18 x 0.81 in
		Weight	28.6 g / 0.06 lb
Varifocal Lens : 2.8 ~ 12 mm		Description	Megapixel day/ night lens
		Focal Length	2.8 ~ 12 mm
		Maximum Aperture	F/1.4
		Mount	CS Mount
		Image Format	1/3"
		Operation	Focus: Manual (w/lock) Zoom: Manual (w/lock) Iris: DC Drive
		Dimension	ø 43 x 44 mm / ø 1.69 x 1.73 in
		Weight	72 g / 0.16 lb